DOLMEN
EXECUTIVE MEETING

TECHNICAL SHEET

These meeting tables are part of the Dolmen range and stand out for their elegant curved shapes and striking, sculptural central leg. Their unique support design brings great visual strength to the table, while clearing the perimeter to offer maximum comfort, ergonomics, and a modern, sophisticated aesthetic.

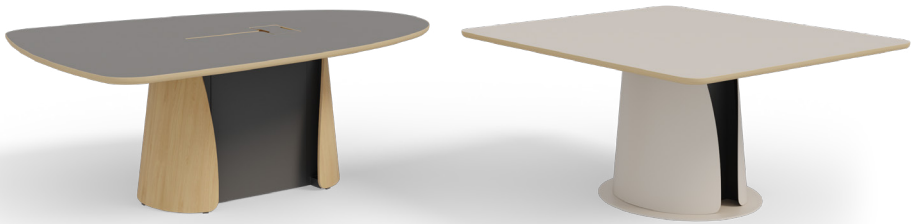

STANDARD FEATURES

CABLE OUTLET

▶ On square/round tables.
Cable grommet opening that allows the passage of up to a male Schuko plug.

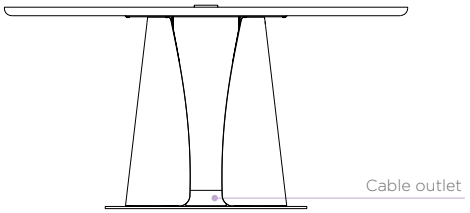

▶ On rectangular, modular and type C tables.
Removable metal panel for wiring access.

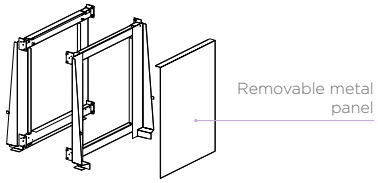

STANDARD FEATURES

TRAY

▶ On rectangular, modular and type C tables.
Metal, t=1mm
Finish color: Black (NE)
Hangs inside the structure.
Hinged for easy access to wiring.

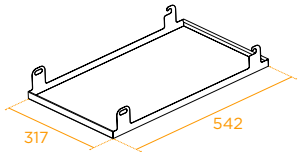

TRAY

▶ On 3-top electrified modular central tables.
Metal, t=0.8mm
ABS side covers in Black (NE).

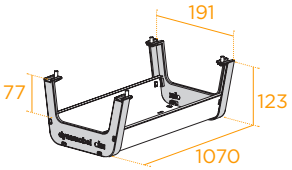

OPTIONAL FEATURES

CHANNEL ACCESSES

▶ NEXO multi-connection box
Black finish (NE)
2F + Empty slot + 1 USB A & C
2F + Empty slot + 2 USB C

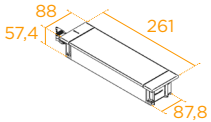



▲ MULTI-CONNECTION BOX

▶ Double-sided hinged cover.
Finish matching the tabletop.
On 2-top modular tables, both tops must have the same type of access.
On 3-top modular tables, there are 3 options available:
- All tops with the same channel access.
- End tops with the same access and the central top without access.
- Central top with access and end tops without access.



Large 500x146 (for rectangular and modular tables)

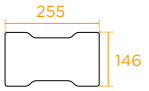

Small 255x146 (for type C, square and round tables)

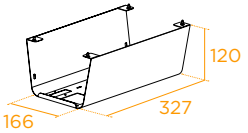

Tray included on square and round tables with a hinged cover.



▲ DOUBLE-SIDED HINGED COVER, TABLETOP FINISH



▲ DOUBLE-SIDED HINGED COVER, TABLE-TOP FINISH, WITH 12MM THICK SLOT FOR TYPE C TABLES

DOLMEN
EXECUTIVE MEETING

TECHNICAL SHEET

DESCRIPTION

WORK TOP

30mm thick tabletop with a birch plywood core.

- 0.5mm **wood** finish with high-resistance lacquer treatment on both upper and lower faces, featuring a rounded edge in lacquered birch plywood.
- 0.7mm **anti-fingerprint HPL** or 2mm linoleum finish on the upper face and black HPL on the lower face, featuring a rounded edge in lacquered birch plywood.

The tabletop comes prepared with M8 metal inserts to receive the legs.

STRUCTURE FOR RECTANGULAR, MODULAR AND TYPE C TABLES

The structure consists of an assembled set of four horizontal crossbars, made of 50 × 30 × 1.5 mm steel tube in accordance with the UNE-EN 10305-5 standard, covered by a DC01 steel metal trim panel (t=0.8mm) according to the UNE-EN 10130 standard.

This trim panel can be removed to facilitate access to the table's electrification and levelling system.

- **The rectangular and type C** tables are composed of the assembled set and two end legs.

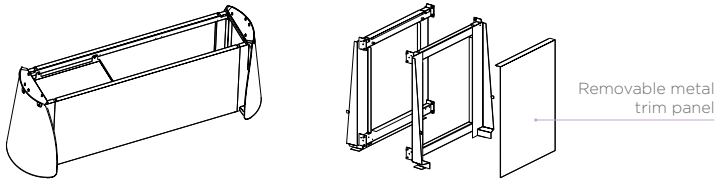

- **2-top modular tables consist of two** end legs and a double assembled set, joined together by a structural intermediate leg.
This intermediate leg is a welded assembly consisting of a tubular structure with an upper plate for joining two tabletops, connected via M12 tie rods to a welded lower plate that acts as a counterweight.

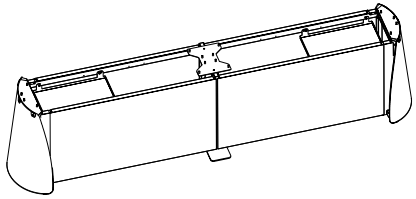

- **3-top modular tables** consist of two assembled structural sets, each with two legs located at their ends.
The legs that face each other in the central area of the table feature a hole that allows wiring to pass between both sets, facilitating the continuity of the electrification system.

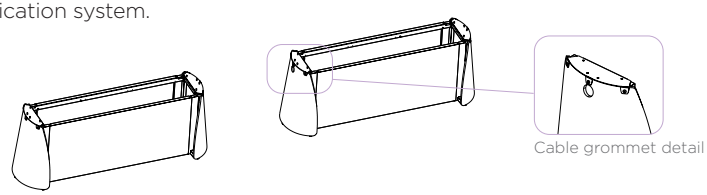

STRUCTURE FOR SQUARE AND ROUND TABLES

- Welded assembly consisting of an upper plate made of 4mm thick DD11 steel, in accordance with the UNE-EN 10111 standard, with a central opening, and 2 folded plates and a lower plate made of 3mm thick DD11 steel, in accordance with the UNE-EN 10111 standard.

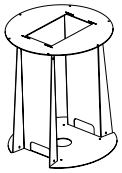

END LEGS

- Petal-shaped **wooden leg**, with an MDF inner core and an oak veneer outer layer. Lacquered finish. Leg thickness: 14mm.
- Petal-shaped **metal leg**, consisting of a welded assembly made of a 2.5mm thick DC01 steel plate in accordance with the UNE-EN 10130 standard, cut and shaped into a petal form.

All legs feature M8 adjustable levellers, allowing height adjustment up to 10mm.

*All metal elements are powder-coated with 60/80-micron epoxy paint, which complies with the current fire reaction standards under UNE 23827-90.

SUSTAINABILITY

MEETING TABLE	% RECYCLED	% RECYCLABLE
Rectangular 240x120	46,64	100
Type C 200x150	47,34	100
2-top modular 320x120	48,58	100
3-top modular 480x120	47,49	100
Square 150x150	57,76	100
Round Ø 150	64,19	100

DOLMEN
EXECUTIVE MEETING

TECHNICAL SHEET

DETAILS

RECTANGULAR TABLE

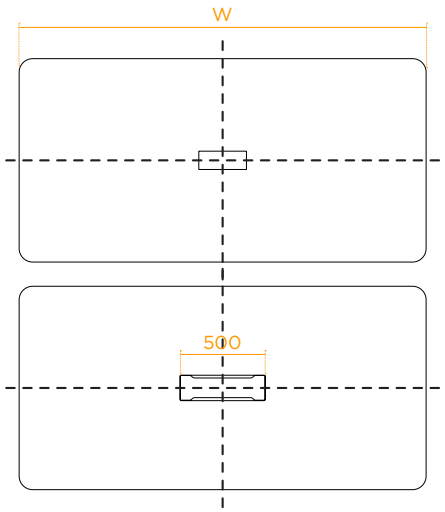

W=2400

TYPE C TABLE

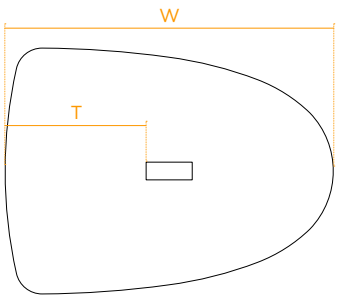

W=1500	T=625
W=2000	T=1000
W= 2500	T=1250

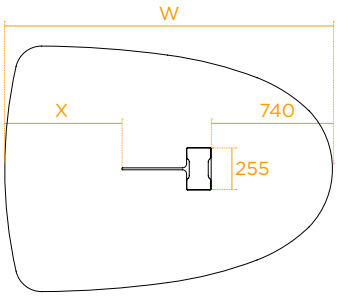

W=1500	X=470
W=2000	X=720
W= 2500	X=720

2-TOP MODULAR TABLE

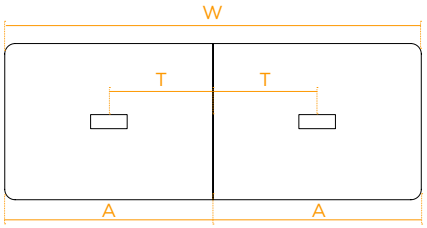

A=1600	T=725
A=2000	T=1000
A= 2400	T=1200

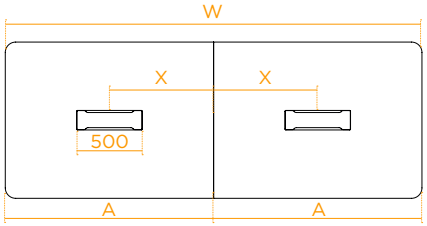

A=1600	X=600
A=2000	X=1000
A= 2400	X=1200

SQUARE/ROUND TABLE

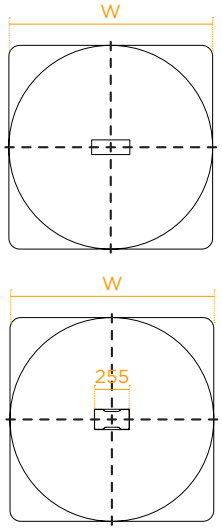

W=1500

3-TOP MODULAR TABLE

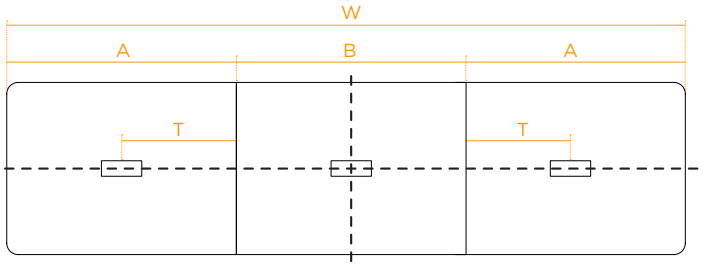

A=1600	T=725
A=2000	T=1000
A= 2400	T=1200

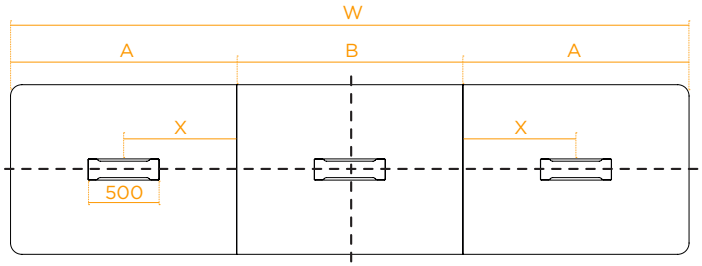

A=1600	X=600
A=2000	X=1000
A= 2400	X=1200

DOLMEN
EXECUTIVE MEETING

TECHNICAL SHEET

DIMENSIONS

RECTANGULAR TABLE

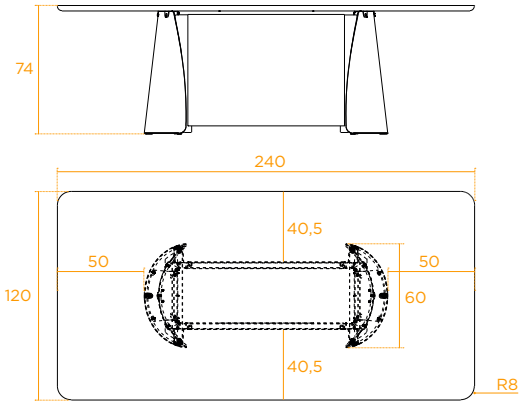

TYPE C TABLE

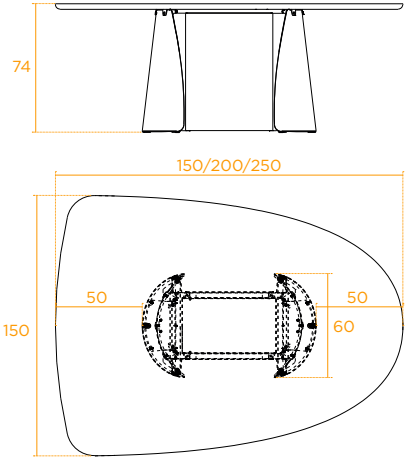

2-TOP MODULAR TABLE

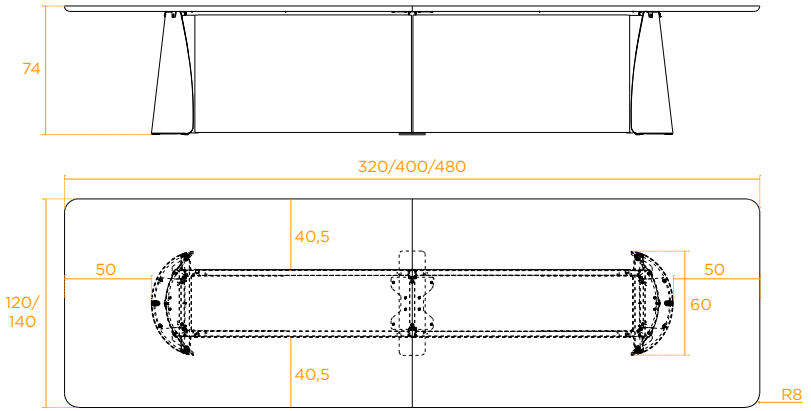

SQUARE/ROUND TABLE

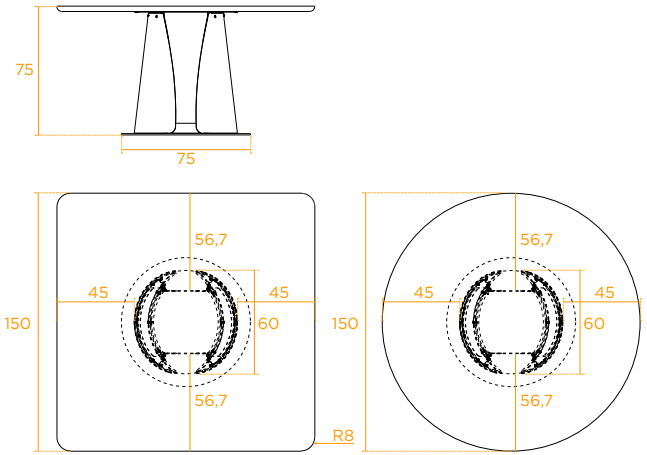

3-TOP MODULAR TABLE

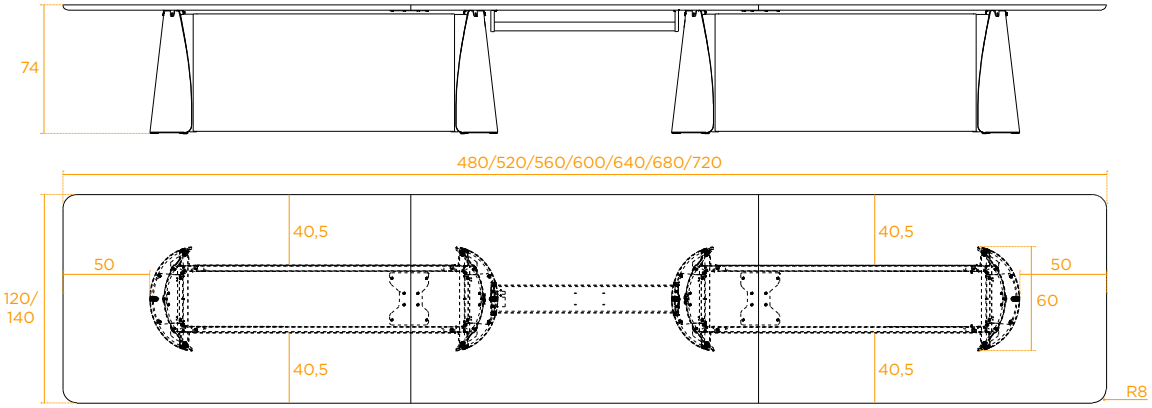

DOLMEN
EXECUTIVE MEETING

TECHNICAL SHEET

RANGE

RECTANGULAR TABLE

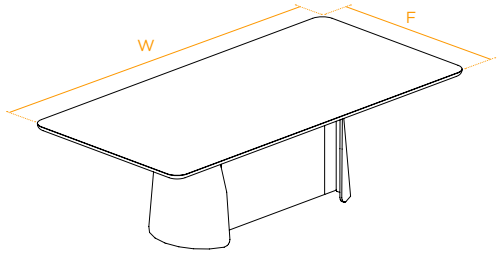

W / F	240
120	●

TYPE C TABLE

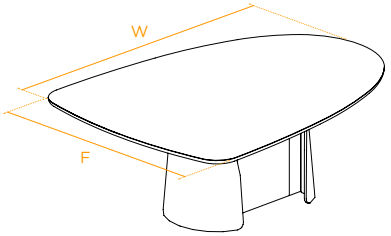

W / F	150	200	250
150	●	●	●

SQUARE/ROUND TABLE

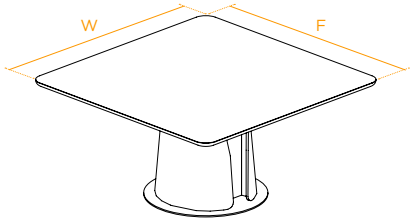

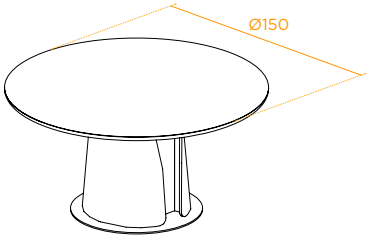

W / F	150
150	●

2-TOP MODULAR TABLE

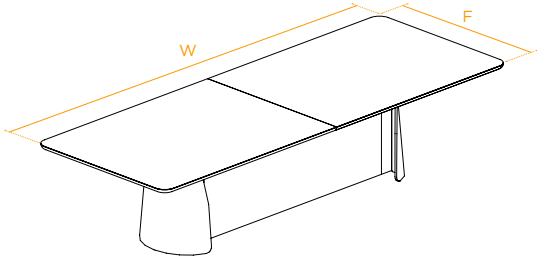

W / F	320	400	480
120	●	●	●
140		●	●

TABLETOP DIMENSIONS
320 • 160+160
400 • 200+200
480 • 240+240

3-TOP MODULAR TABLE

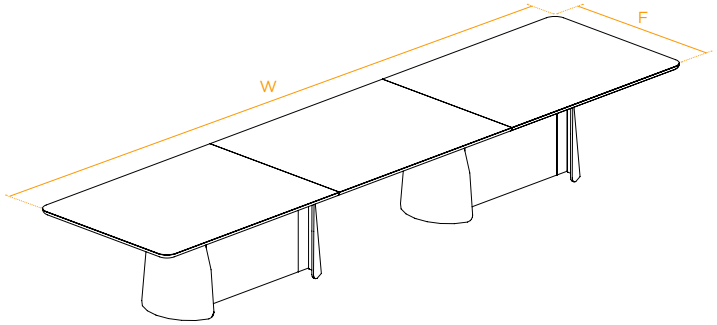

W / F	480	520	560	600	640	680	720
120	●	●	●	●	●	●	●
140	●	●	●	●	●	●	●

TABLETOP DIMENSIONS
480 • 160+160+160
520 • 160+200+160
560 • 160+240+160
• 200+160+200
600 • 200+200+200
640 • 200+240+200
• 240+160+240
680 • 240+200+240
720 • 240+240+240